E SERIES

SWIVEL JOINTS FOR WATER, HYDRAULIC OIL, CHEMICAL FLUID, AIR DN 10 – DN 80

- Single flow, axial- Flanged, weld end connection
- Easy replacement of sealing parts
- For poor water quality
- Special sealing components (According to fluid)
- Carbon steel or stainless steel body
- Special inner sealing surface (hardened)
- All flange types are avaible (DN, ANSI etc...)

OPERATING CONDITIONS

Max. Pressure, Water	: 250 Bar
Max. Temperature, Water	: 120°
Max. Speed	: 1-20

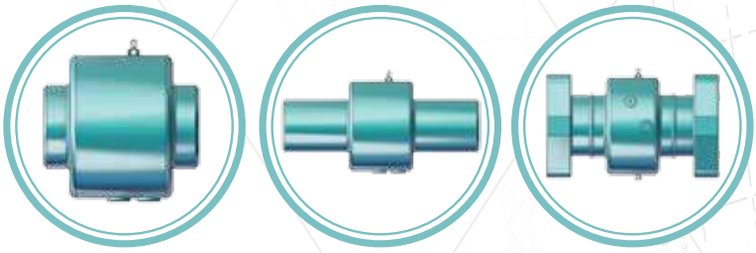

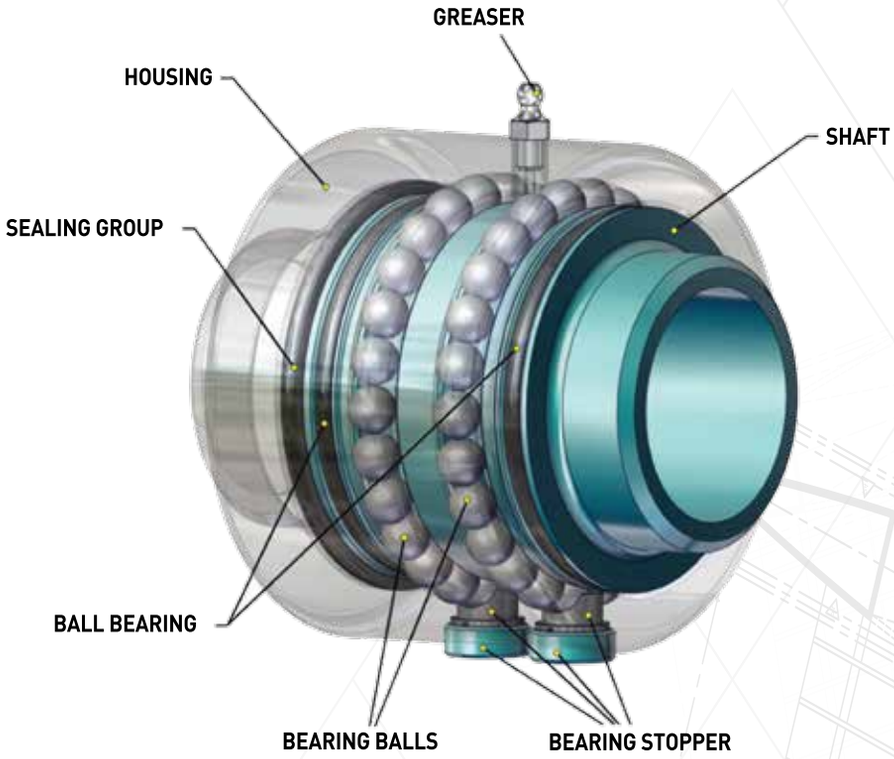

Rototech
ROTARY UNION • SWIVEL JOINTS

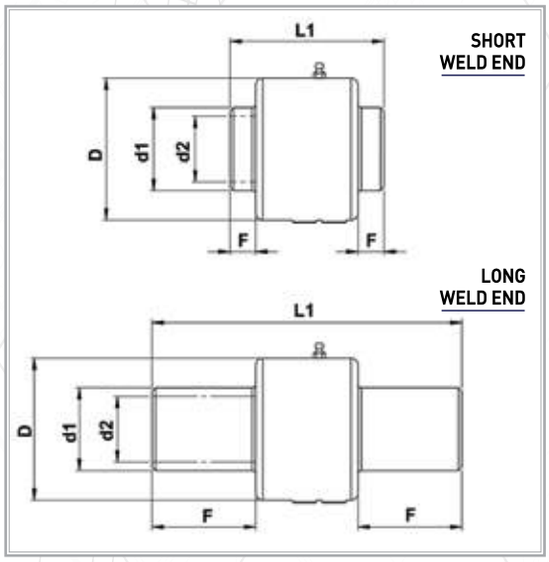

	SIZE DN	MODEL NO	L 1	D	d1	d2	F	KG
STANDARD	20	ET-120-S	70	59	27	18	13	0,8
	25	ET-125-S	76	68	35	25	13	1,1
	32	ET-132-S	90	76	42	32	15	1,8
	40	ET-140-S	89	82	48	38	15	2
	50	ET-150-S	88	97	60	49	15	2,6
	65	ET-165-S	88	116	76,1	60	15	3,7
	80	ET-180-S	93	124	88,9	76	15	3,8
LONG	20	ET-120-L	144	59	27	18	50	0,9
	25	ET-125-L	170	64	35	25	60	1,5
	32	ET-132-L	160	76	42	32	50	2,1
	40	ET-140-L	179	82	48	38	60	2,4
	50	ET-150-L	208	97	60	49	75	3,5
	65	ET-165-L	208	116	76,1	60	75	5,3
	80	ET-180-L	213	124	88,9	76	75	5,5

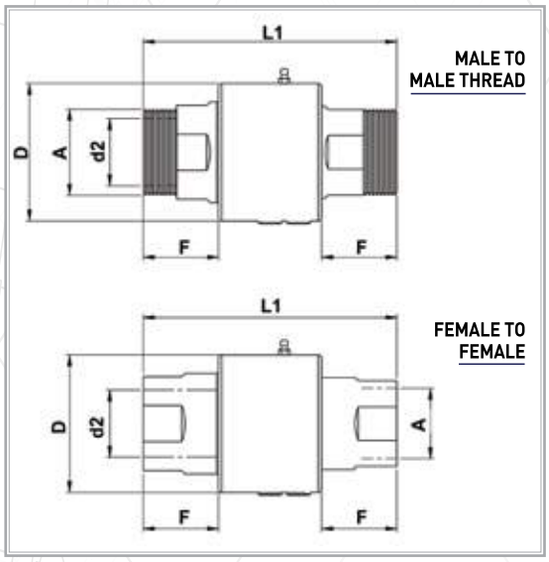

SIZE DN	MODEL NO	L 1	D	A	d2	F	KG
20	ET220	116	59	3/4"	18	36	0,90
25	ET225	140	68	1"	25	45	1,35
32	ET232	168	76	1 1/4"	32	54	2,30
40	ET240	152	82	1 1/2"	40	45	2,50
50	ET250	158	97	2"	50	55	3,25
65	ET265	163	116	2 1/2"	65	55	4,50
80	ET280	172	124	3"	80	56	5,35
20	ET320	116	59	3/4"	18	36	0,90
25	ET325	140	64	1"	25	45	1,35
32	ET332	168	76	1 1/4"	32	54	2,30
40	ET340	152	82	1 1/2"	40	45	2,50
50	ET350	158	97	2"	50	55	3,25
65	ET365	163	116	2 1/2"	65	55	4,50
80	ET380	172	124	3"	80	56	5,35

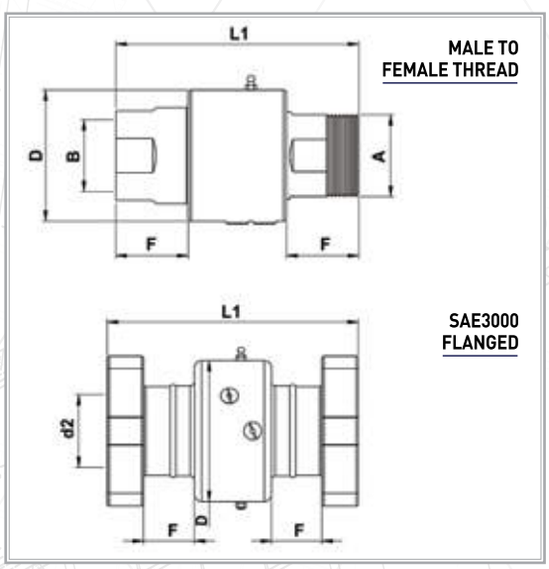

	SIZE DN	MODEL NO	L 1	D	A	Ød2	B	F	KG
MALE TO FEMALE THREAD	20	ET420	116	59	3/4"		3/4"	36	0,90
	25	ET425	140	68	1"		1"	45	1,35
	32	ET432	168	76	1 1/4"		1 1/4"	54	2,30
	40	ET440	152	82	1 1/2"		1 1/2"	45	2,50
	50	ET450	158	97	2"		2"	55	3,25
	65	ET465	163	116	2 1/2"		2 1/2"	55	4,50
	80	ET480	172	124	3"		3"	56	5,35
SAE3000 FLANGED	15	ET515	139	59		13		32,5	1,10
	20	ET520	146	68		19		33	1,35
	25	ET525	156	64		25		35	1,90
	32	ET532	210	76		32		50	3,26
	40	ET540	180	82		38		34	3,80
	50	ET550	173	97		50		35	4,70
	65	ET565	183	116		63		40	6,20
	80	ET580	190	124		73		38	9,25

E SERIES

SWIVEL JOINTS TYPES

TYPE1
SHORT WELD END

TYPE 1
LONG WELD END

TYPE 2
MALE-MALE THREAD

TYPE 3
FEMALE-FEMALE

TYPE 4
FEMALE-MALE

TYPE 5
SAE FLANGED

TYPE 6
90° FEMALE-MALE THREAD

TYPE 7
90° THREAD FEMALE-THREAD

TYPE 8
90° FEMALE-90° FEMALE THREAD

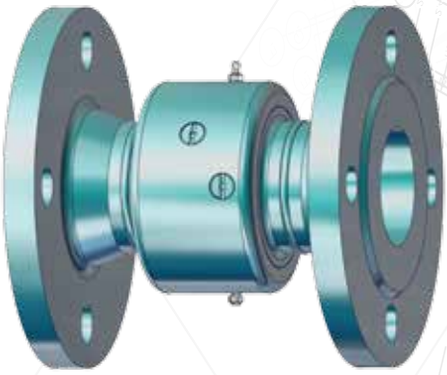

TYPE 9
FLANGED