Swivel Joint

E4-DDS Series

Media Type
Hydraulic Oil, Water + General Purpuse

Max. Speed
20 RPM

Max. Pressure
300 BAR

Max. Temperature
120 °C

Connection Type
BSPP, BSPT, NPT, Metric

Rotor Size
1/4” DN08 - 1 1/2” DN40

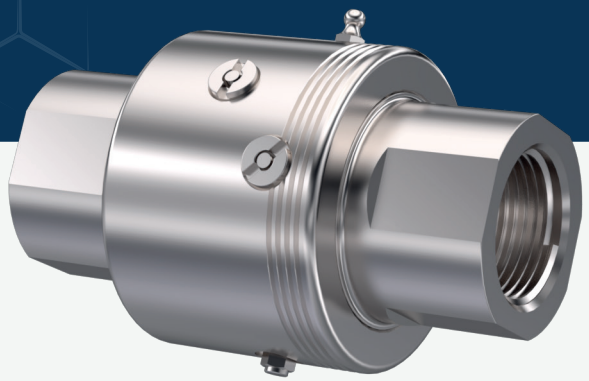

- Single flow design,
- Stainless steel material
- Hardened inner sealing surface
- Special design sealing components
- Easy changable repair parts
- BSP, BSPP, NPT, UNF, Metric threads...

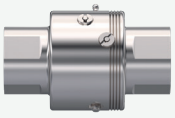

Swivel Joint for water, hydraulic oil, gress and chemical fluids

Do not operate without fluid.

DIMENSIONS

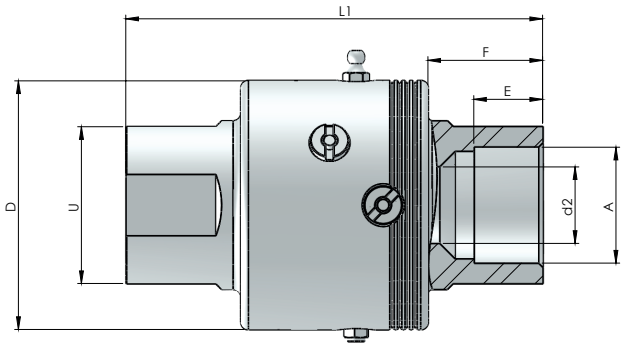

SIZE	MODEL NO	A	DØ	L1	E	F	d2Ø	U	KG
1/4”	E4 - DD-008-1-304	1/4” NPT	50	95,50	12	23	7	22	0,73
1/4”	E4 - DD-008-2-304	1/4” BSP	50	95,50	12	23	7	22	0,73
1/4”	E4 - DD-008-3-304	1/4” BSPP	50	95,50	12	23	7	22	0,73
3/8”	E4 - DD-010-1-304	3/8” NPT	50	89	12	23	9	22	0,71
3/8”	E4 - DD-010-2-304	3/8” BSP	50	89	12	23	9	22	0,71
3/8”	E4 - DD-010-3-304	3/8” BSPP	50	89	12	23	9	22	0,71
1/2”	E4 - DD-015-1-304	1/2” NPT	50	93	14	25	12	27	0,76
1/2”	E4 - DD-015-2-304	1/2” BSP	50	93	14	25	12	27	0,76
1/2”	E4 - DD-015-3-304	1/2” BSPP	50	93	14	25	12	27	0,76
3/4”	E4 - DD-020-1-304	3/4” NPT	60	102,00	16	26,50	14	32	1,96
3/4”	E4 - DD-020-2-304	3/4” BSP	60	102,00	16	26,50	14	32	1,96
3/4”	E4 - DD-020-3-304	3/4” BSPP	60	102,00	16	26,50	14	32	1,96

Rototech® All Rights Reserved.

1”	E4 - DD-025-1-304	1” NPT	65	109	18	30	20	41	1,48
1”	E4 - DD-025-2-304	1” BSP	65	109	18	30	20	41	1,48
1”	E4 - DD-025-3-304	1” BSPP	65	109	18	30	20	41	1,48
1 1/4”	E4 - DD-032-1-304	1 1/4” NPT	75	142	20	35	25	50	2,73
1 1/4”	E4 - DD-032-2-304	1 1/4” BSP	75	142	20	35	25	50	2,73
1 1/4”	E4 - DD-032-3-304	1 1/4” BSPP	75	142	20	35	25	50	2,73
1 1/2”	E4 - DD-040-1-304	1 1/2” NPT	80	142,50	22	35	32	55	2,93
1 1/2”	E4 - DD-040-2-304	1 1/2” BSP	80	142,50	22	35	32	55	2,93
1 1/2”	E4 - DD-040-3-304	1 1/2” BSPP	80	142,50	22	35	32	55	2,93

Rototech® All Rights Reserved.