Swivel Joint

E1-KKS3 Series

Media Type
Hydraulic Oil, Water + General Purpuse

Max. Speed
20 RPM

Max. Pressure
250 BAR

Max. Temperature
120 °C

Connection Type
Weld End

Rotor Size
3/4” DN20 - 8” DN200

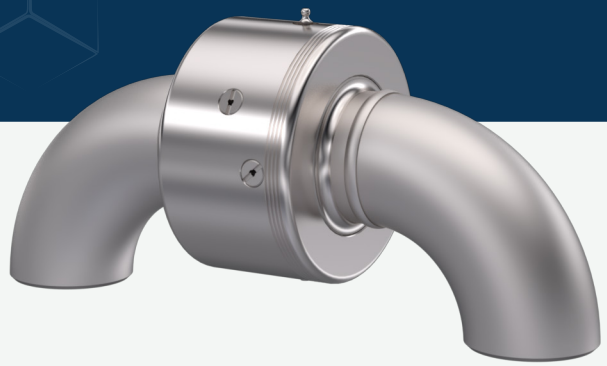

- Single flow design
- Stainless steel body
- Hardened inner sealing surface
- Special design sealing components
- Easy changable repair parts
- Weld end connection

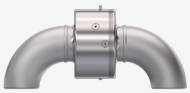

Swivel Joint for water, hydraulic oil, gress and chemical fluids

Do not operate without fluid.

DIMENSIONS

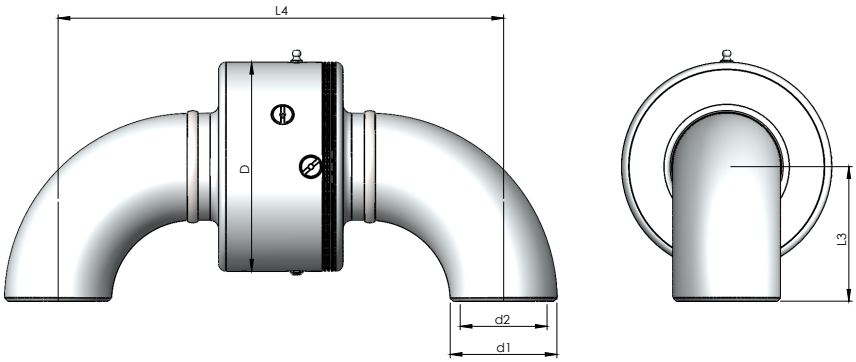

SIZE	MODEL NO	DØ	L3	L4	d1Ø	d2Ø	KG
20	E1 - KK3-020-304	72	29	133	26,90	21,10	1,68
25	E1 - KK3-025-304	78	35	146	33,70	27,30	1,93
32	E1 - KK3-032-304	88	48	201	42,40	35,20	3,56
40	E1 - KK3-040-304	100	57	219	48,30	36,90	5,21
50	E1 - KK3-050-304	118	76	252	60,30	48,50	7,01
65	E1 - KK3-065-304	133	95	300	76,10	59	11,30
80	E1 - KK3-080-304	139	114	340	88,90	76,30	11,30
100	E1 - KK3-100-304	175	152	414	114,30	101,70	18,56
125	E1 - KK3-125-304	199	190	520	139,70	127,10	28,60
150	E1 - KK3-150-304	222	229	603	168,30	154,10	38,46
200	E1 - KK3-200-304	288	305	790	219,10	199,10	85,54

Rototech® All Rights Reserved.