Swivel Joint

E2-FF2 Series

Media Type
Hydraulic Oil, Water + General Purpuse

Max. Speed
20 RPM

Max. Pressure
100-200 BAR

Max. Temperature
120 °C

Connection Type
FL

Rotor Size
3/4” DN20 - 8” DN200

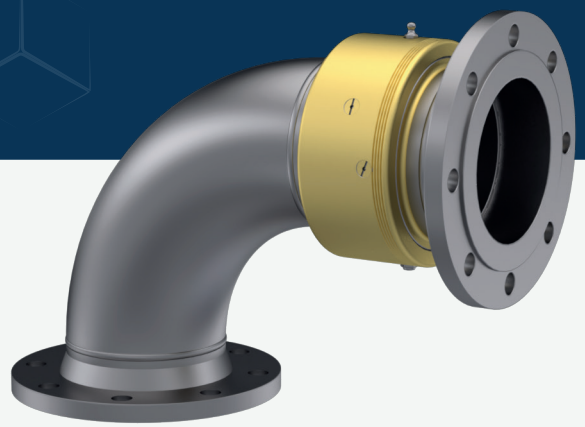

- Single flow design, vertical rotation
- Carbon steel material
- Hardened inner sealing surface
- Special design sealing components
- Easy changable repair parts
- All flage types are aviable DIN, ANSI etc..

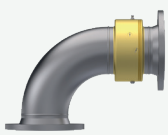

Swivel Joint for water, hydraulic oil, gress and chemical fluids

Do not operate without fluid.

DIMENSIONS

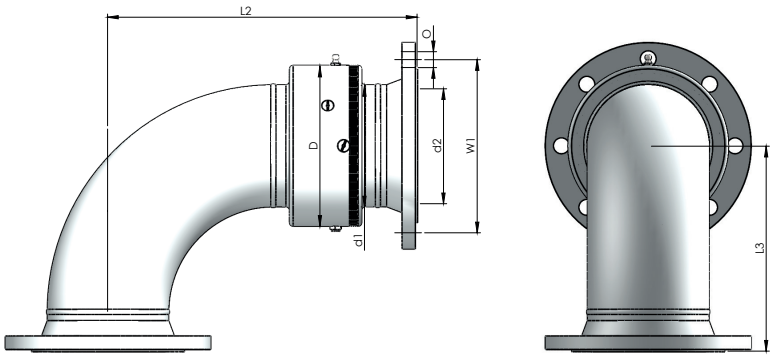

SIZE	MODEL NO	DØ	L2	L3	d1Ø	d2Ø	F	W1Ø	OØ	KG
20	E2 - FF2-020	72	142	67	26,90	18	35	75	14 X 4	3,30
25	E2 - FF2-025	78	149	73	33,70	27,30	35	85	14 X 4	4,05
32	E2 - FF2-032	88	193	88	42,40	35,20	39	100	18 X 4	6,50
40	E2 - FF2-040	100	204	99	48,30	36,90	41	110	18 X 4	8,45
50	E2 - FF2-050	118	221	121	60,30	48,50	42	125	18 X 4	11,52
65	E2 - FF2-065	133	250	140	76,10	59	44,50	145	18 X 8	15,51
80	E2 - FF2-080	139	275	164	88,90	82,50	47,50	160	18 X 8	16,35
100	E2 - FF2-100	175	314	204	114,30	107,10	49,50	180	18 X 8	22,93
125	E2 - FF2-125	199	385	245	139,70	131,70	53	210	18 X 8	33,85
150	E2 - FF2-150	222	429	284	168,30	159,30	55,50	240	22 X 8	42,19
200	E2 - FF2-200	288	547	367	219,10	207,30	63	295	22 X 12	81,47

Rototech® All Rights Reserved.